Brennerlanze 32-HA-SAC-N-"L"-H-RR Wld

32-YH1G-4G-D

01-06-10

"L"<1200: 24V- 60W

1200<="L"<2400: 42V-100W

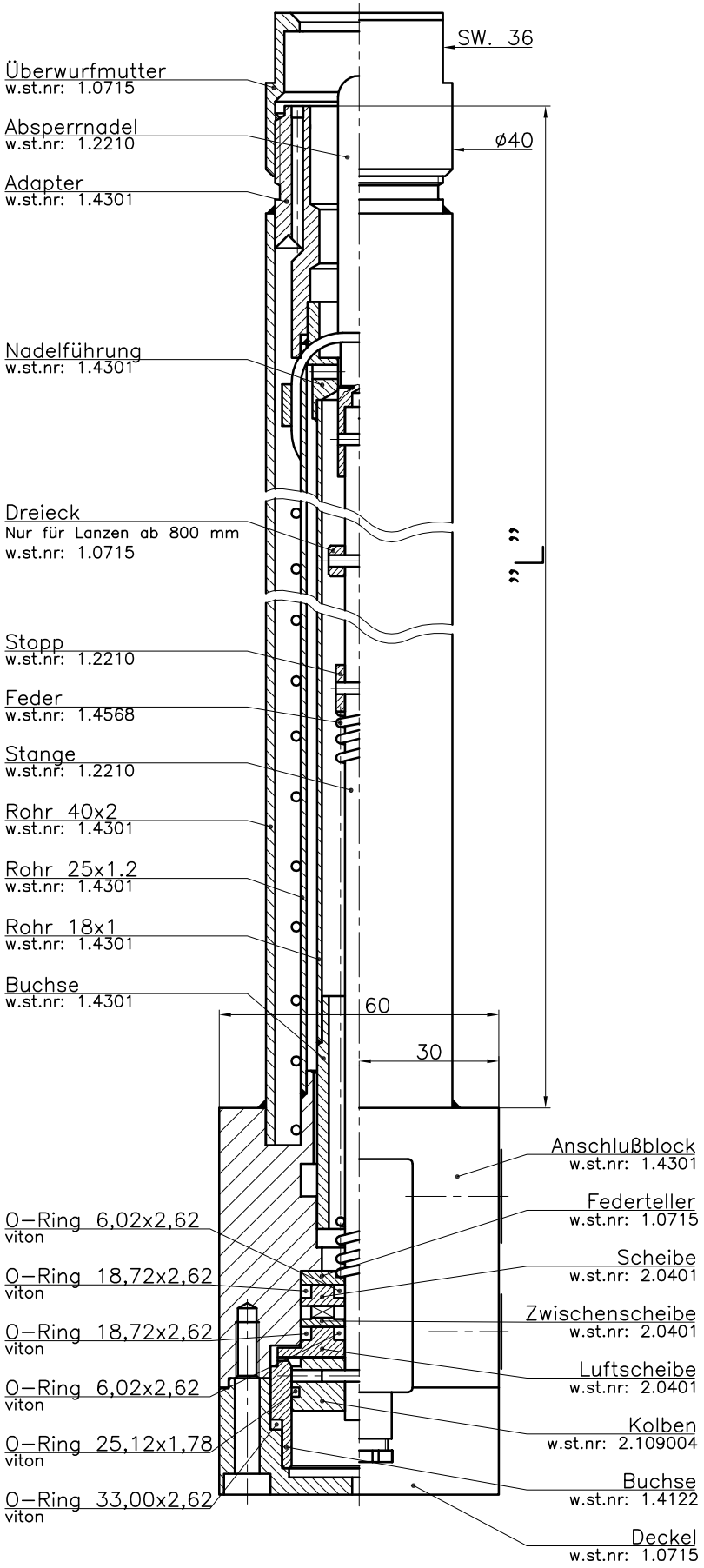

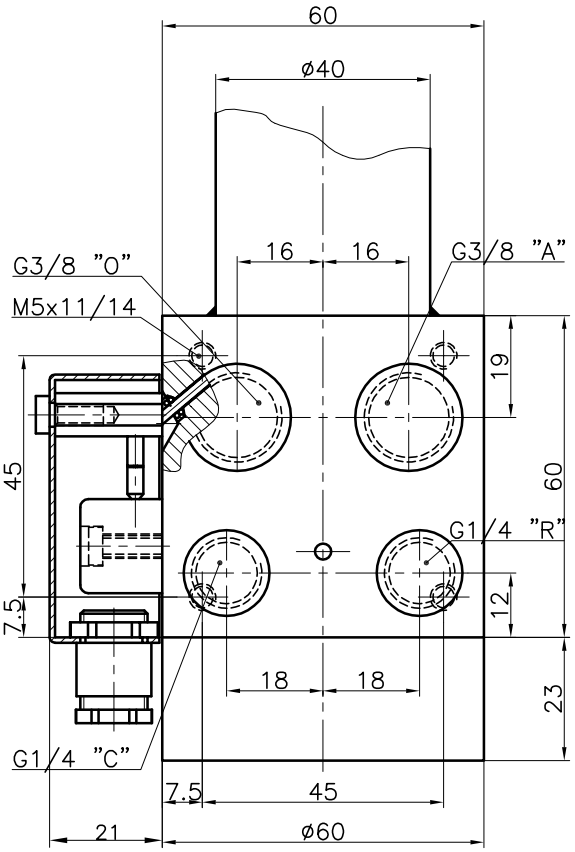

© Fluidics Instruments BV