Burnerlance 12-H-"L"-RDS-R Welded
with 6mm hose connection

12-XG21-4G-E

05-04-19

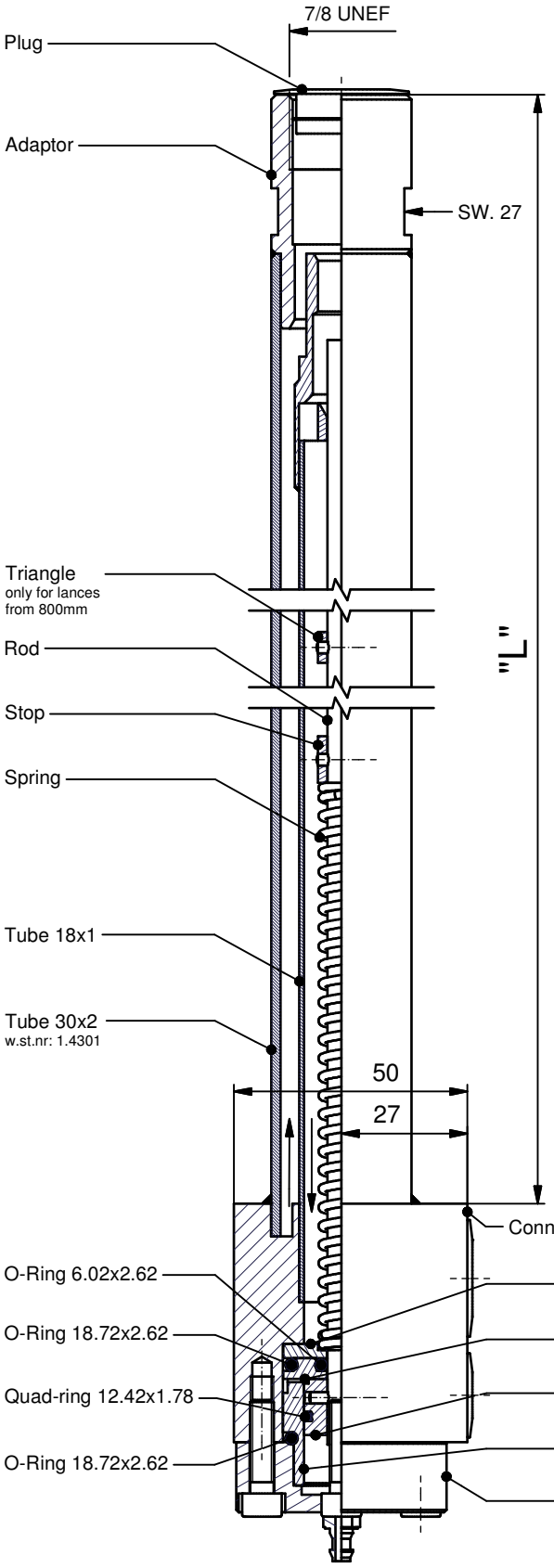

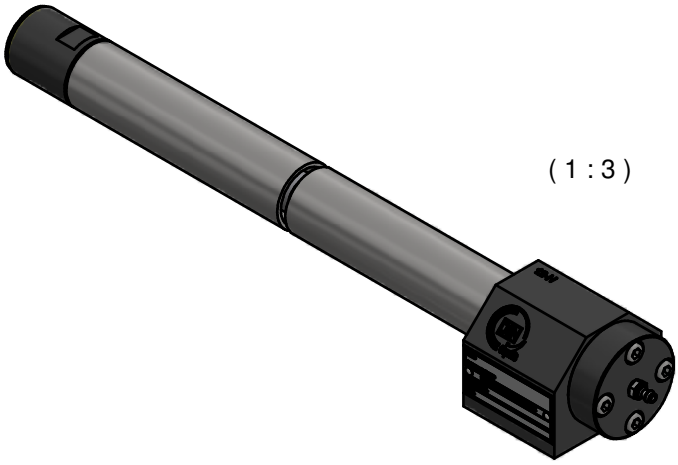

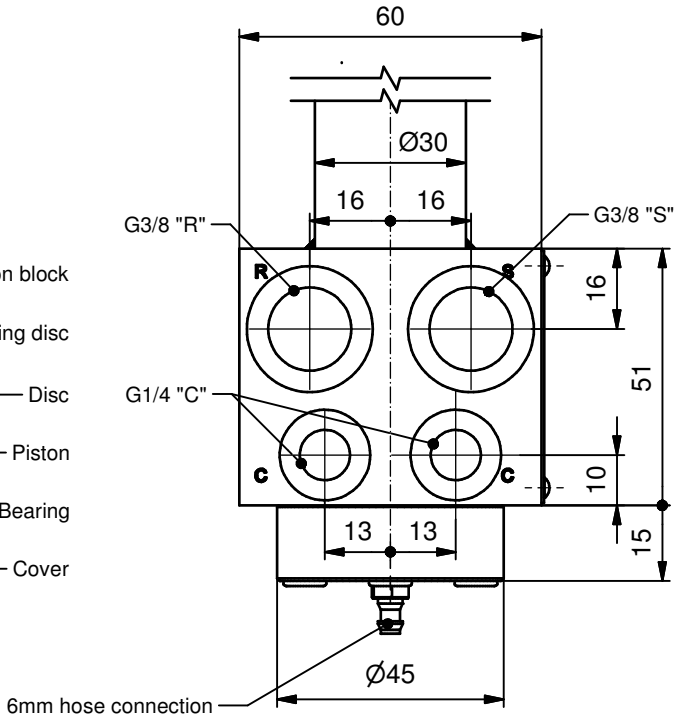

© *Fluidics Instruments BV*