Air/Steam atomizer
15AHNT–"A°"–"size"–6

15–K101–4G–E
20–08–08

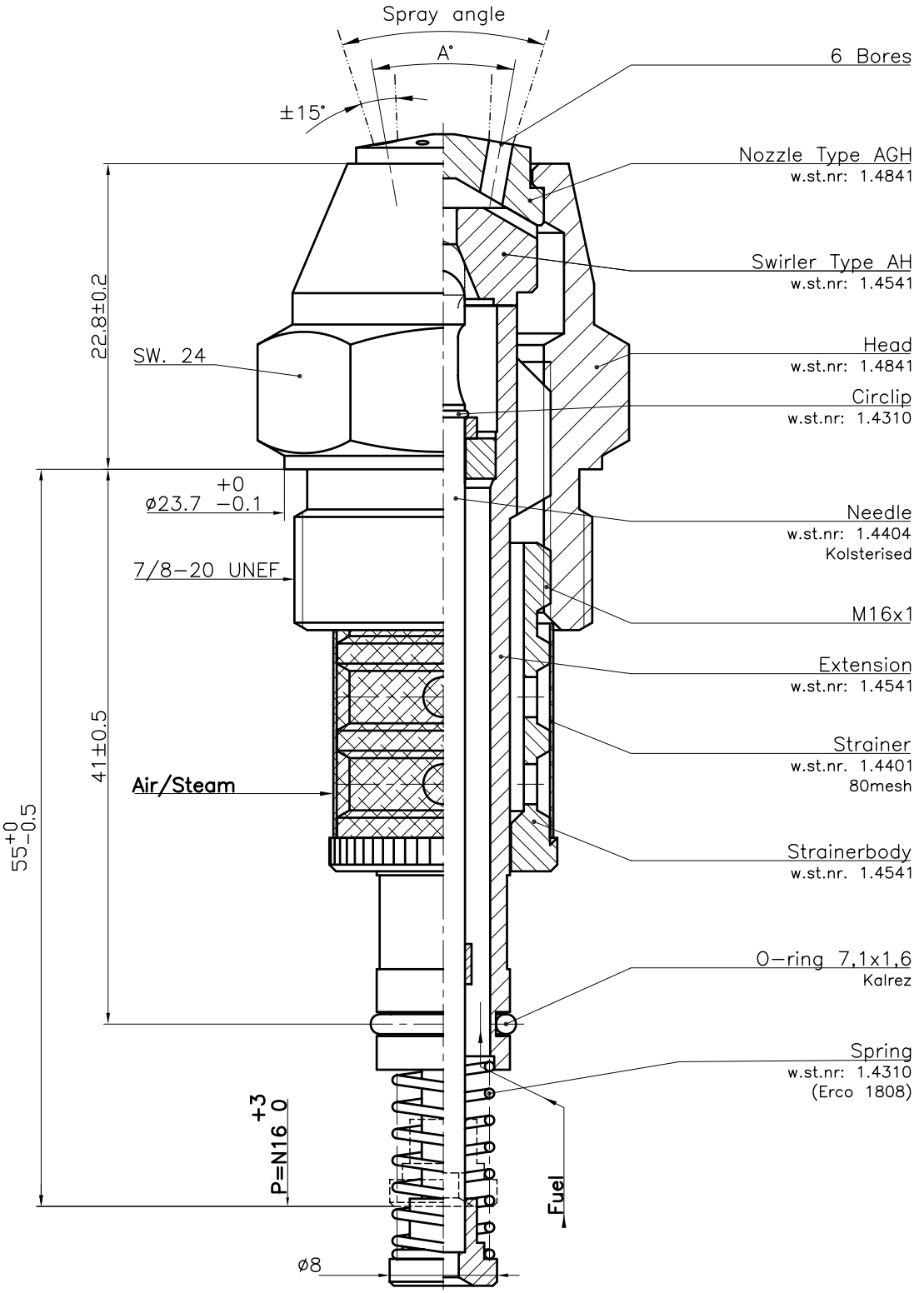

Size
50
60
70
80
90
100
115
130
145
160
180
200
225
250
275
300

ORDERING: please specify:

- Atomizer type
- Angle A°
- Size
- Number of bores
- Quantity

MARKING ON HEXAGON:

Manufacturer
Atomizer Type
Angle A°

Fi	15AHNT	45°	200	6	08.04

Size
Number of bores
Date of manufacturing

GENERAL DATA:

Angle A° from 0° upto 90° available in steps of 5°.

Max. viscosity: 40 cSt.

© Fluidics Instruments BV