Burnerlance 24–SG–"L" Welded

24–YB01–4G–E
18–03–08

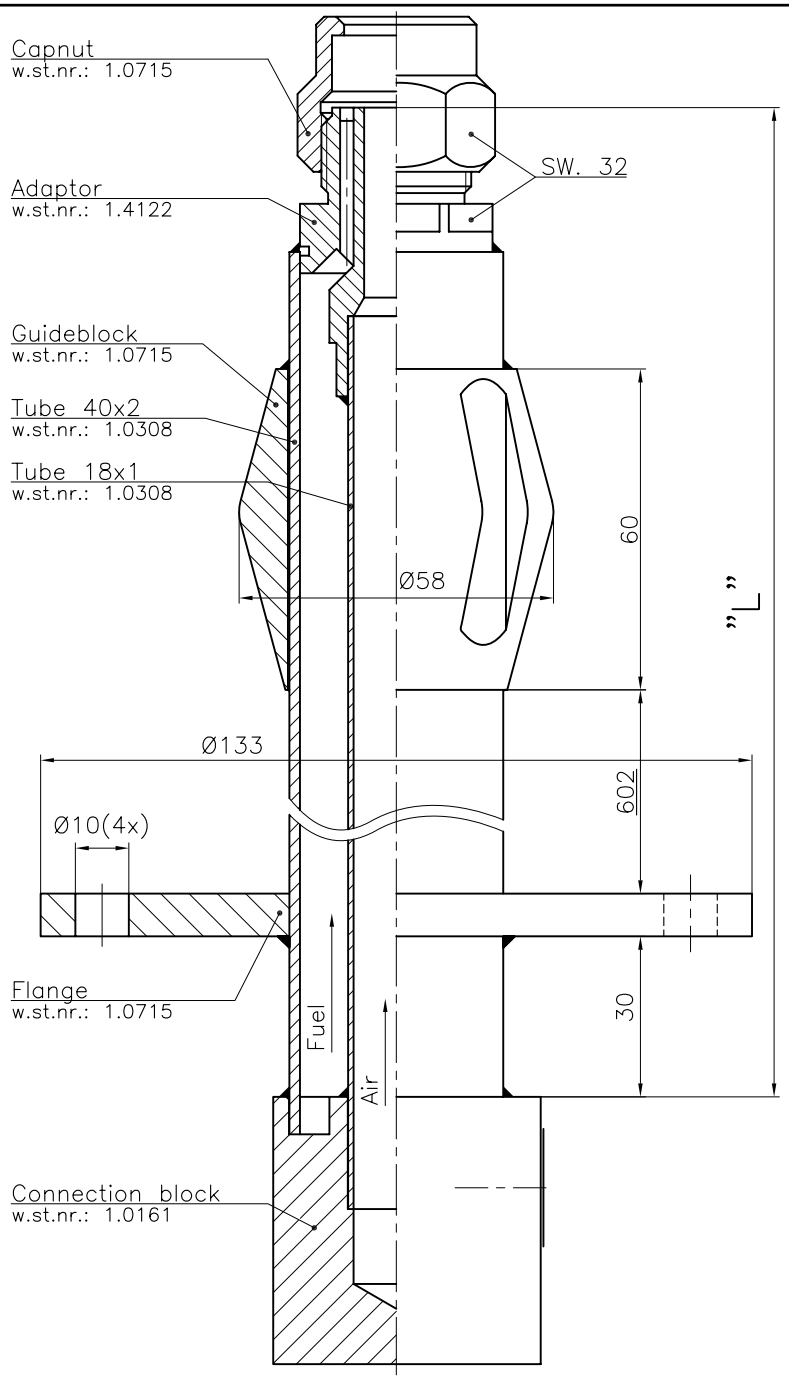

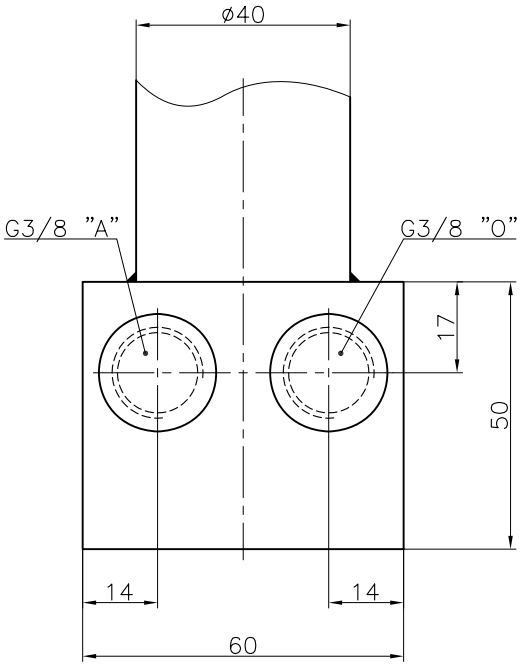

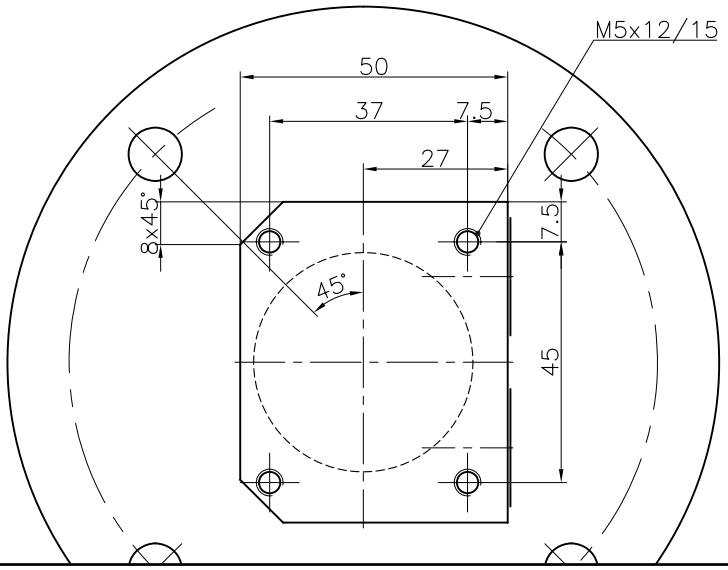

© Fluidics Instruments BV