Regulator 32-VK1L

32-TC01-4G-E

15-01-09

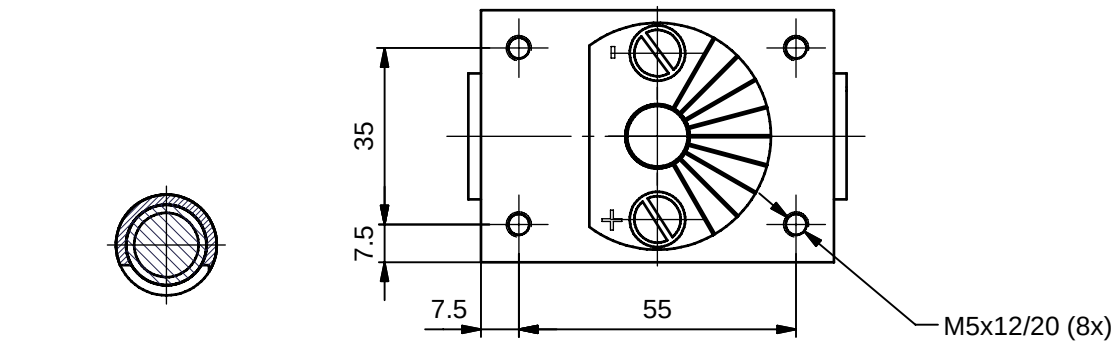

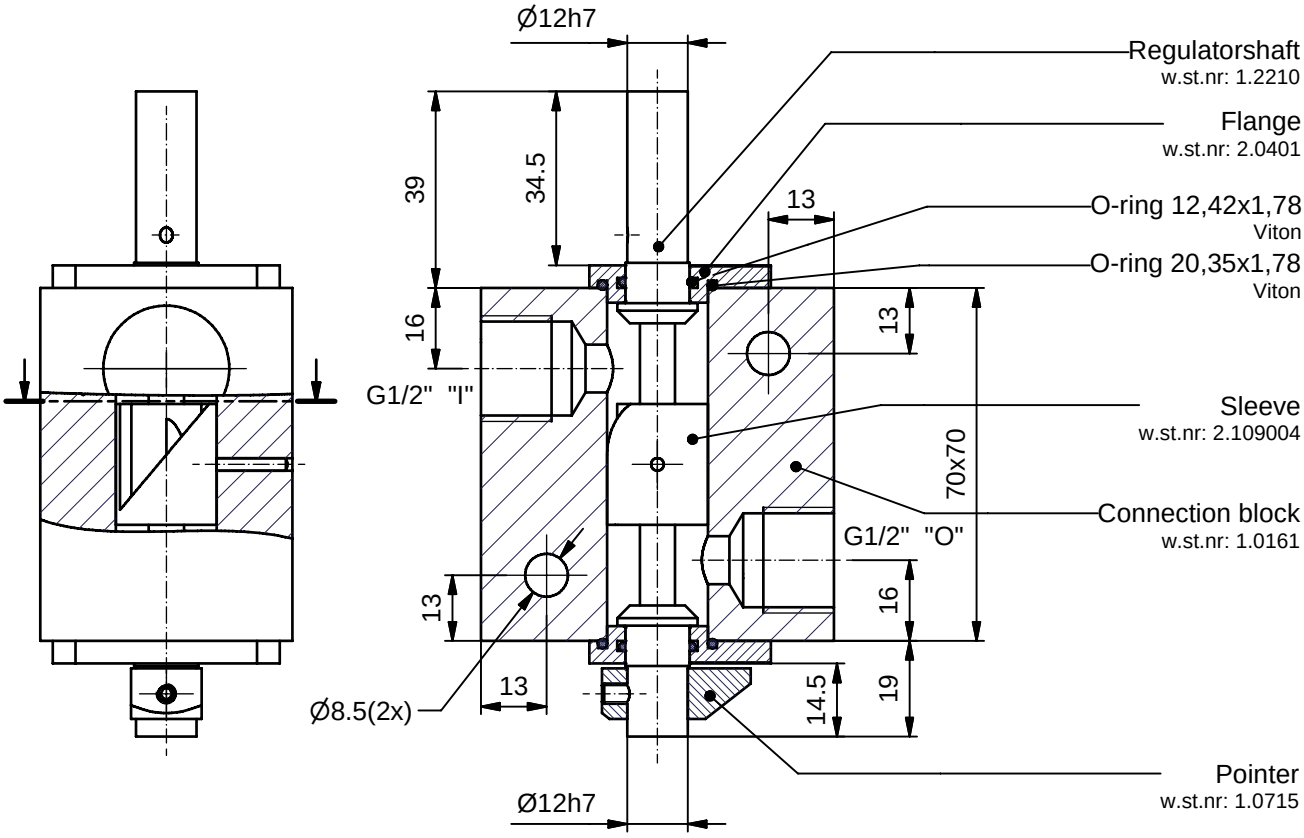

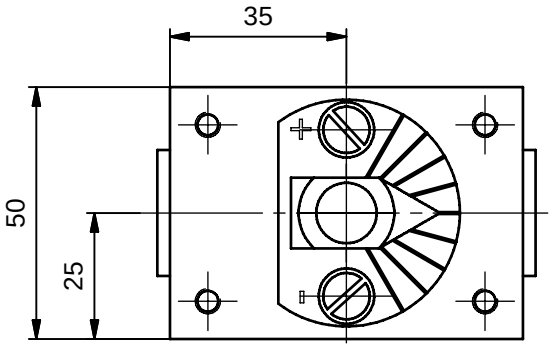

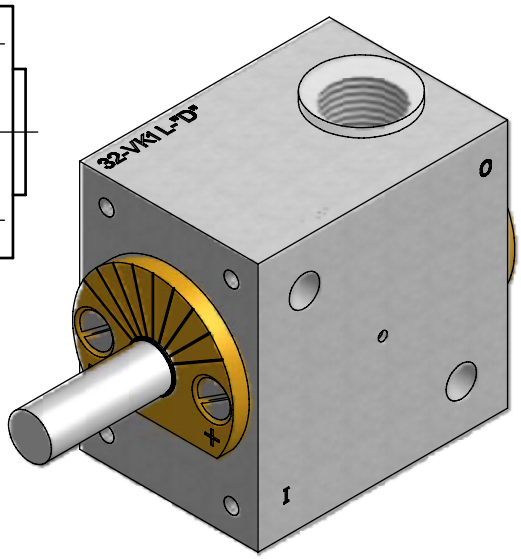

© *Fluidics Instruments BV*