Regulator 40-VC1K
with Key-groove

40-TV01-4G-E

20-11-23

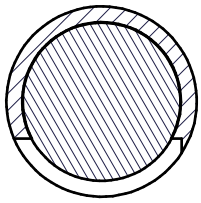

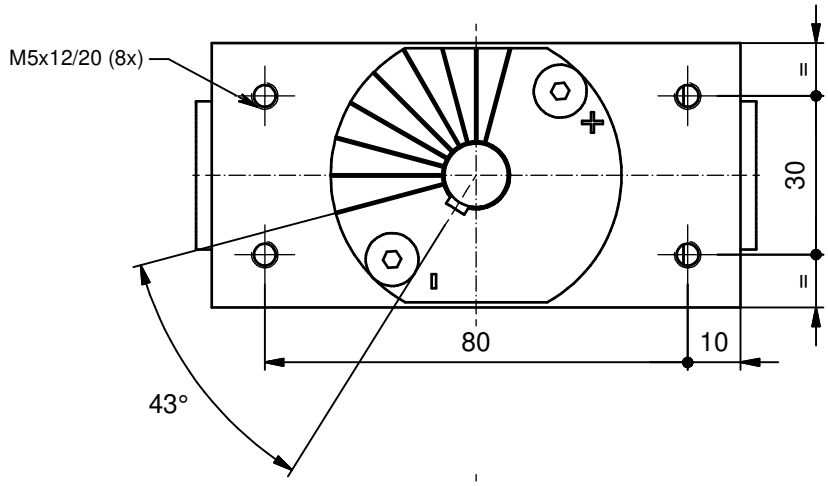

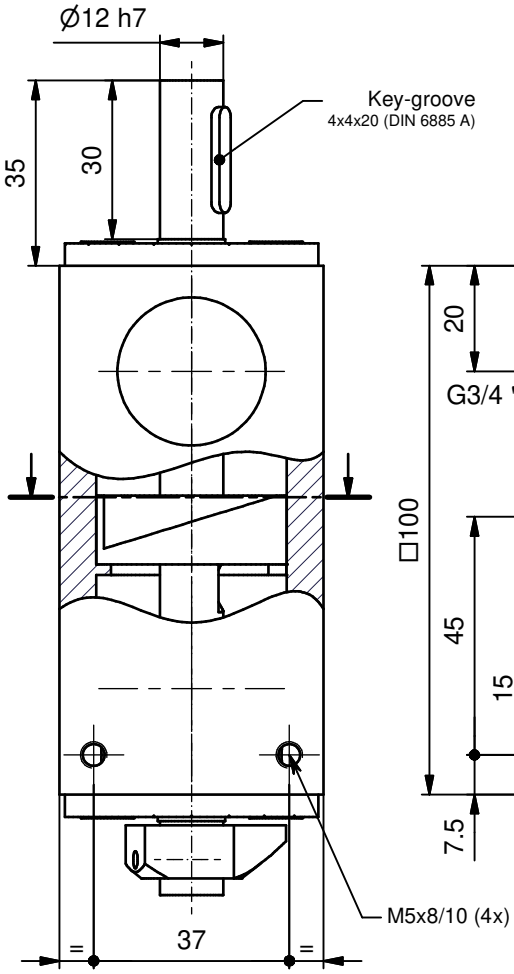

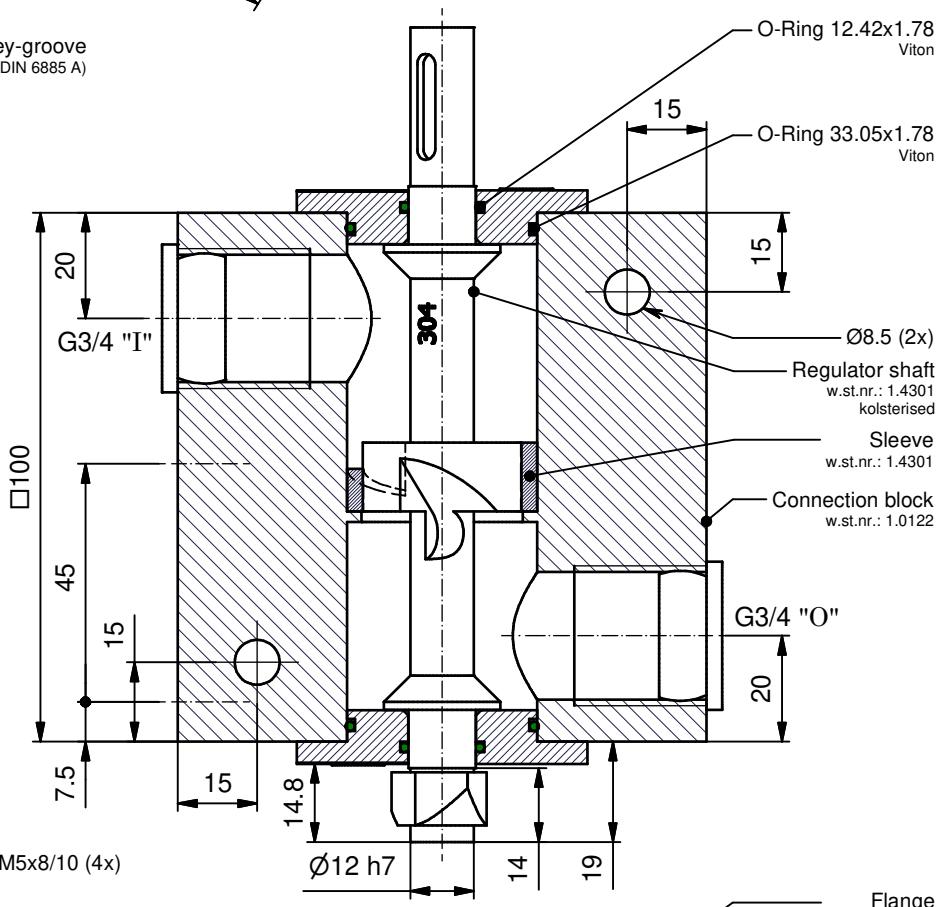

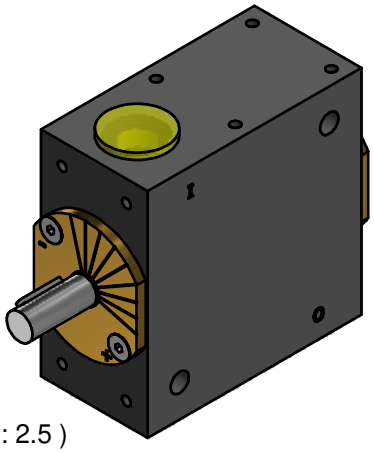

(1 : 2.5)

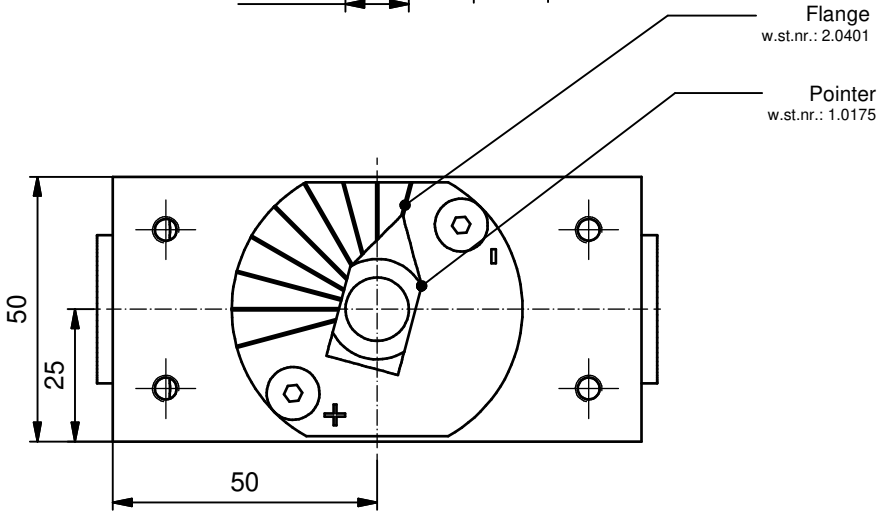

© *Fluidics Instruments BV*