Regulator 40-VZM1

40-VS01-4G-E
23-11-2005

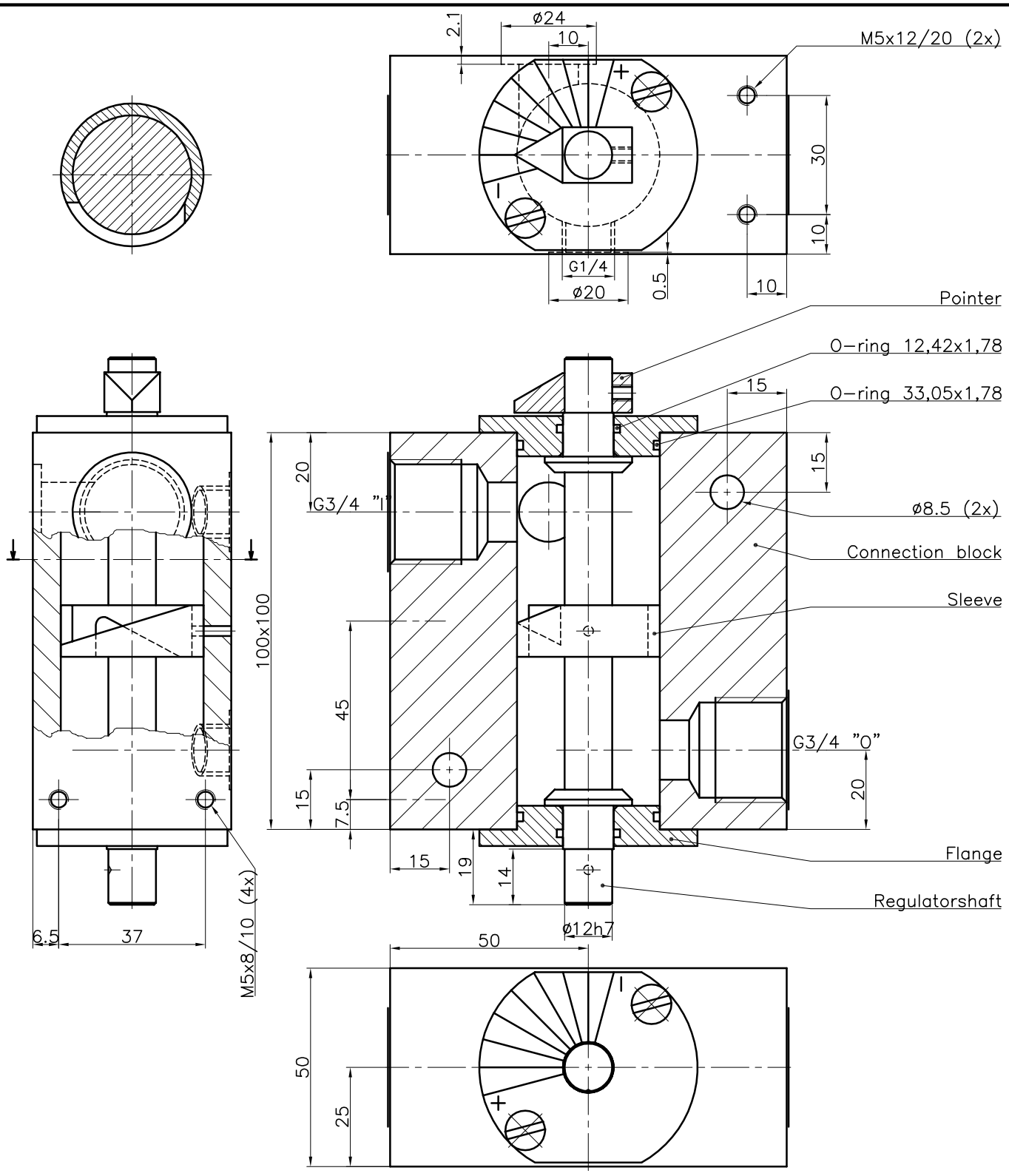

© Fluidics Instruments BV