Regulator 40–VZN1

40–VU01–4G–E
22–11–2005

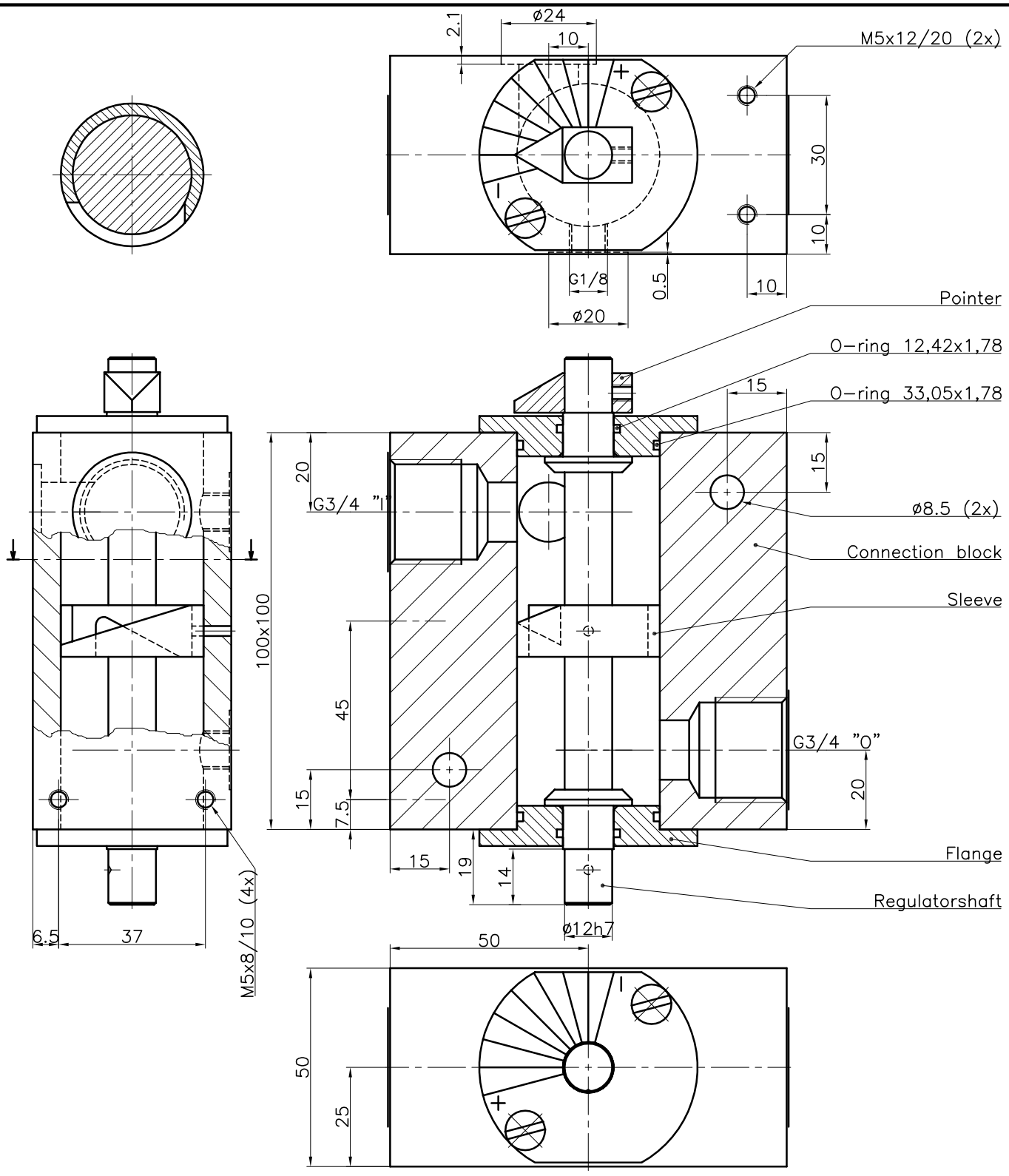

© Fluidics Instruments BV