Burnerlance 40–EH–"L"–"d"
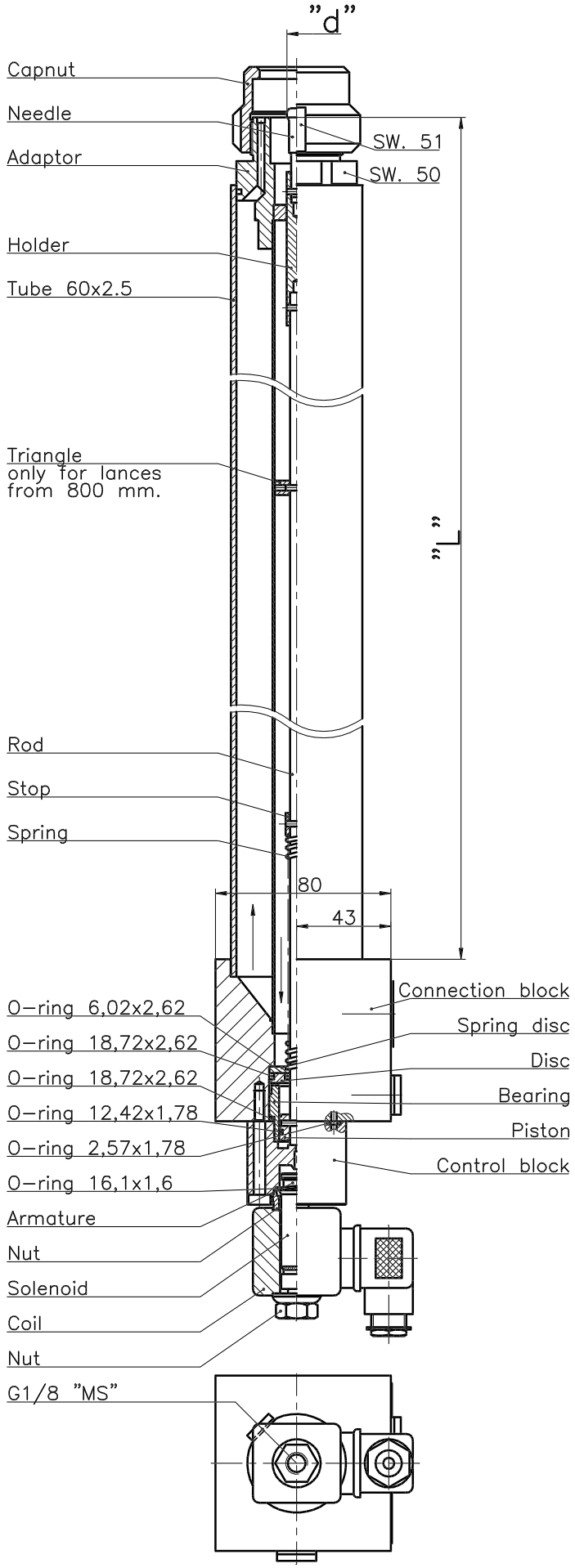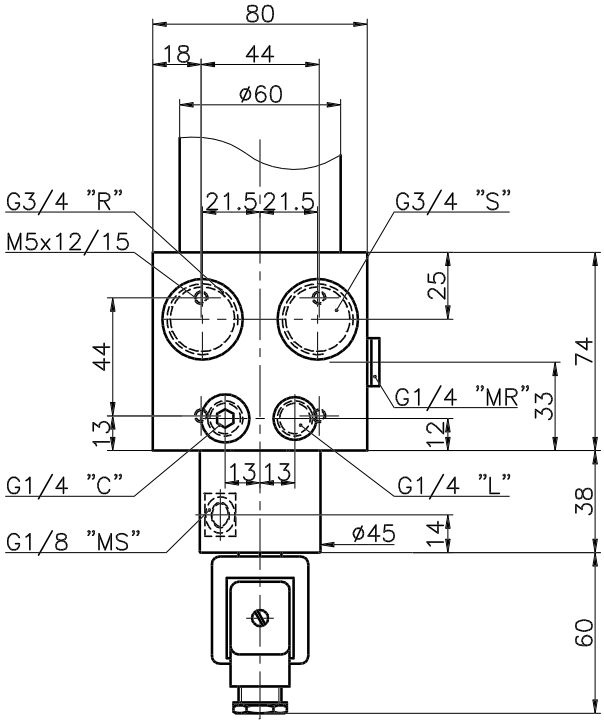
40–XS01–4G–E
08–03–00