Extension 40-BP-"L" Welded

40-YN01-4G-E

06-10-16

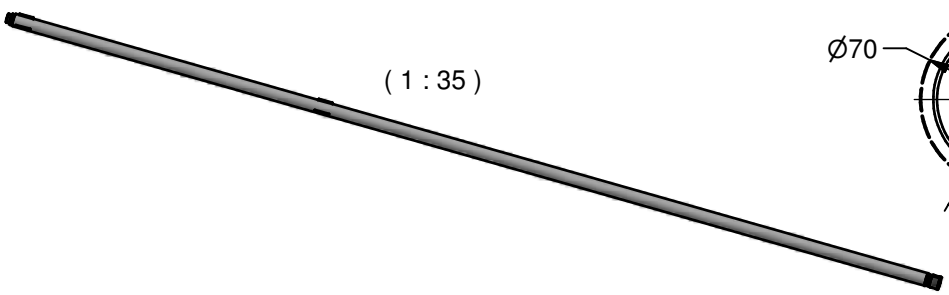

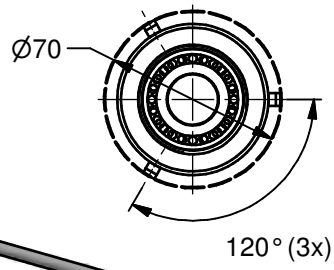

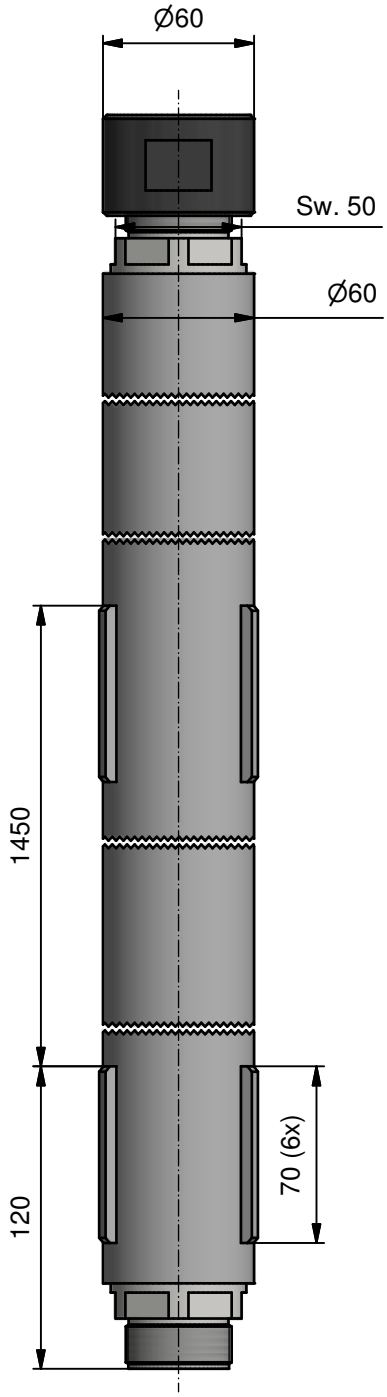

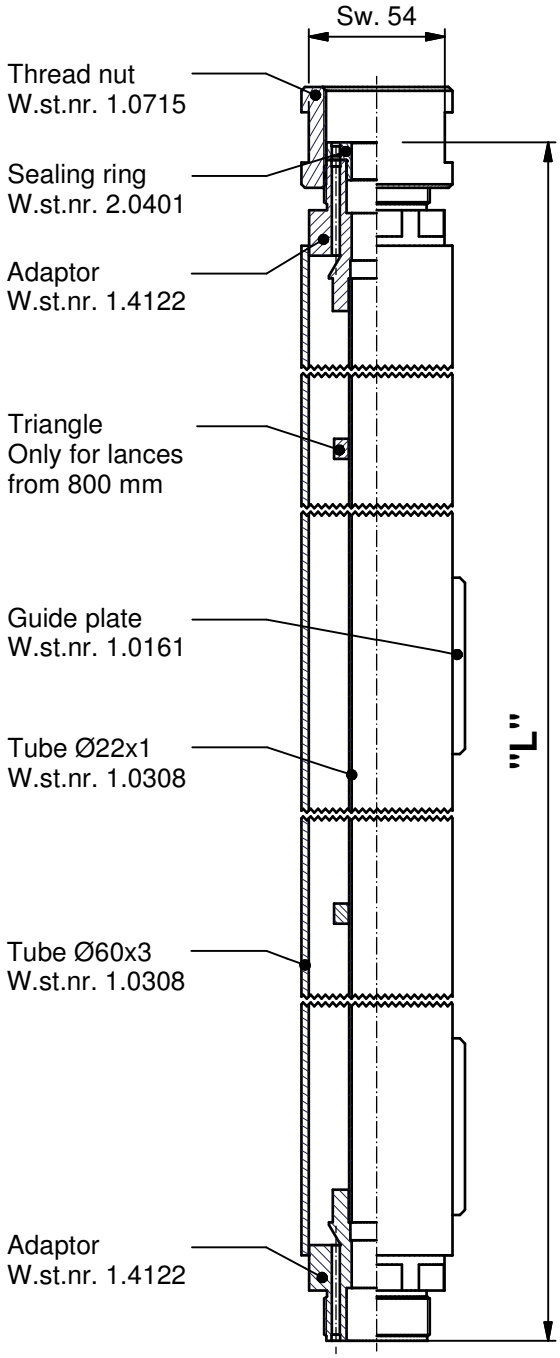

© *Fluidics Instruments BV*