Burnerlance
40–SKW–"L"–14404 1/2Perlast Wld

40–Z11V–4G–E
25–04–08

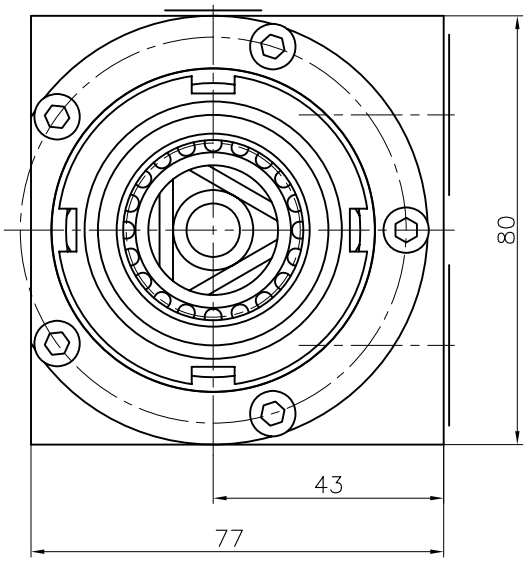

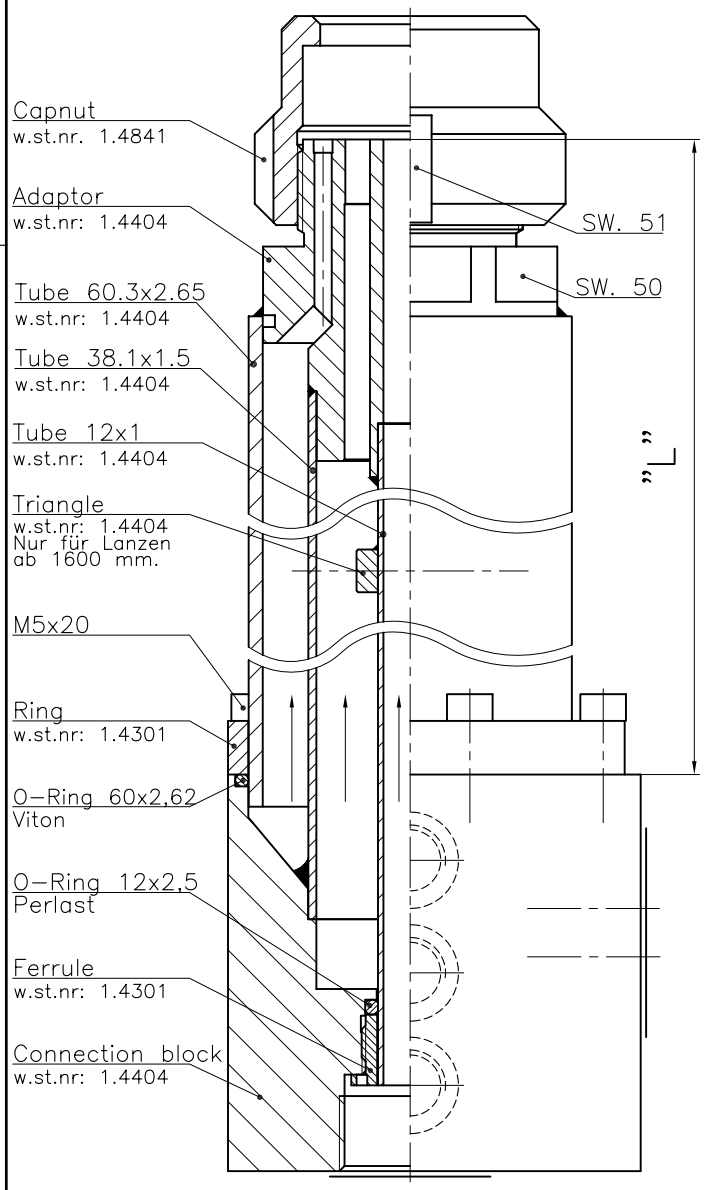

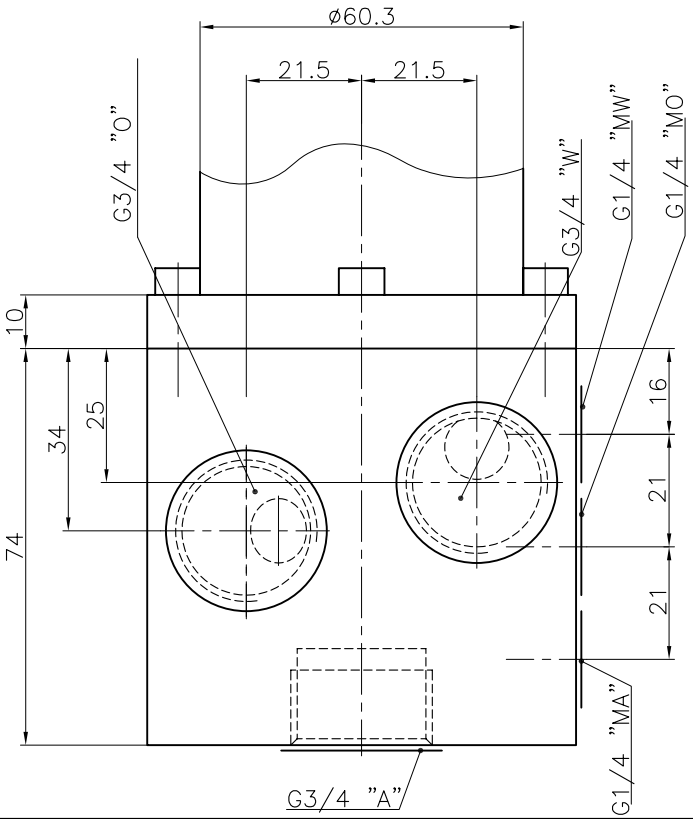

© Fluidics Instruments BV